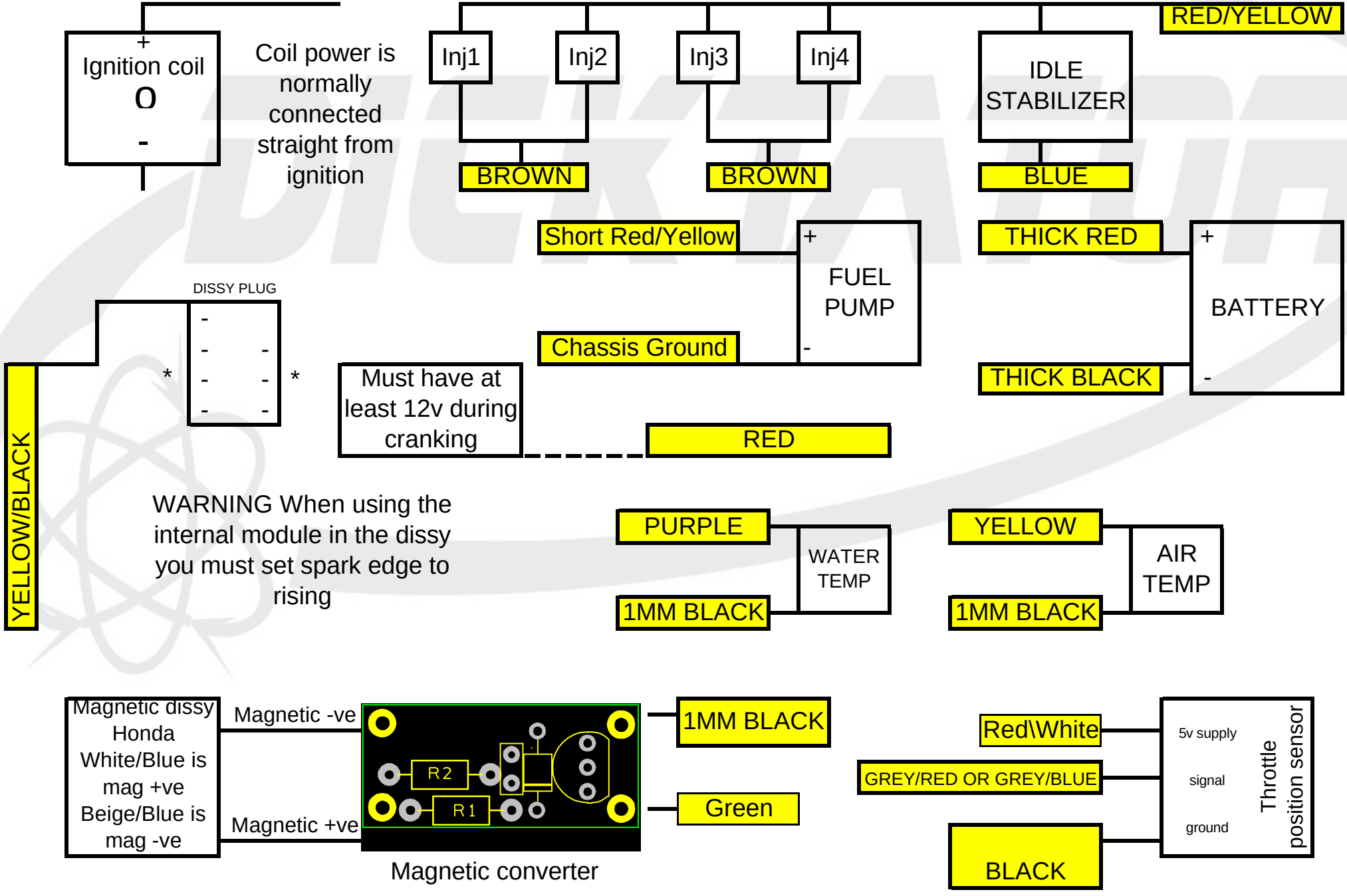

HONDA Magnetic Dissy

WWW.DICKTATOR.CO.ZA