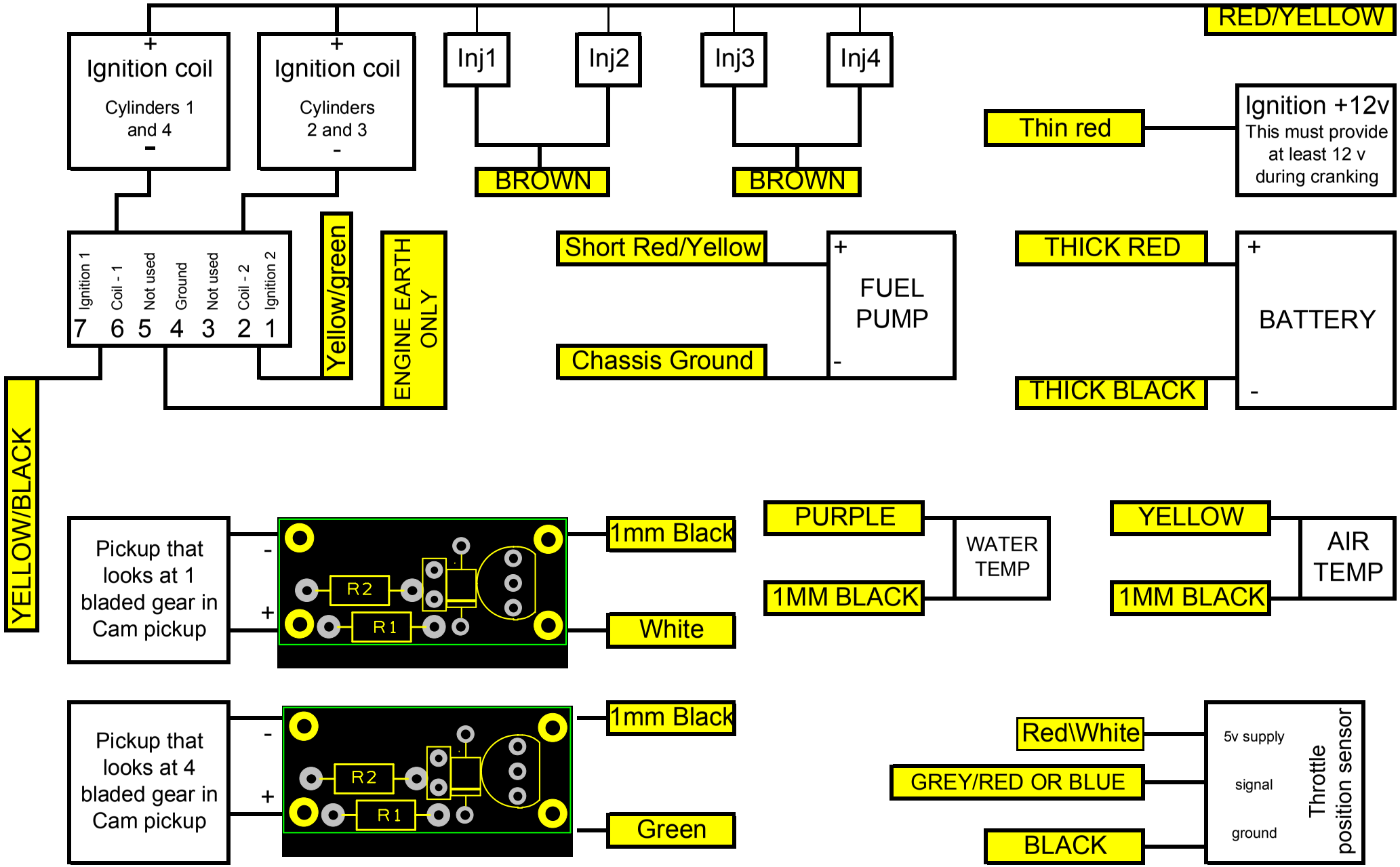

Magnetic converter

as seen from component side

Most Toyota's have a 24 tooth gear
You must grind 20 of the teeth of or we can supply a 4 bladed gear

Must be mounted close to cam pickup